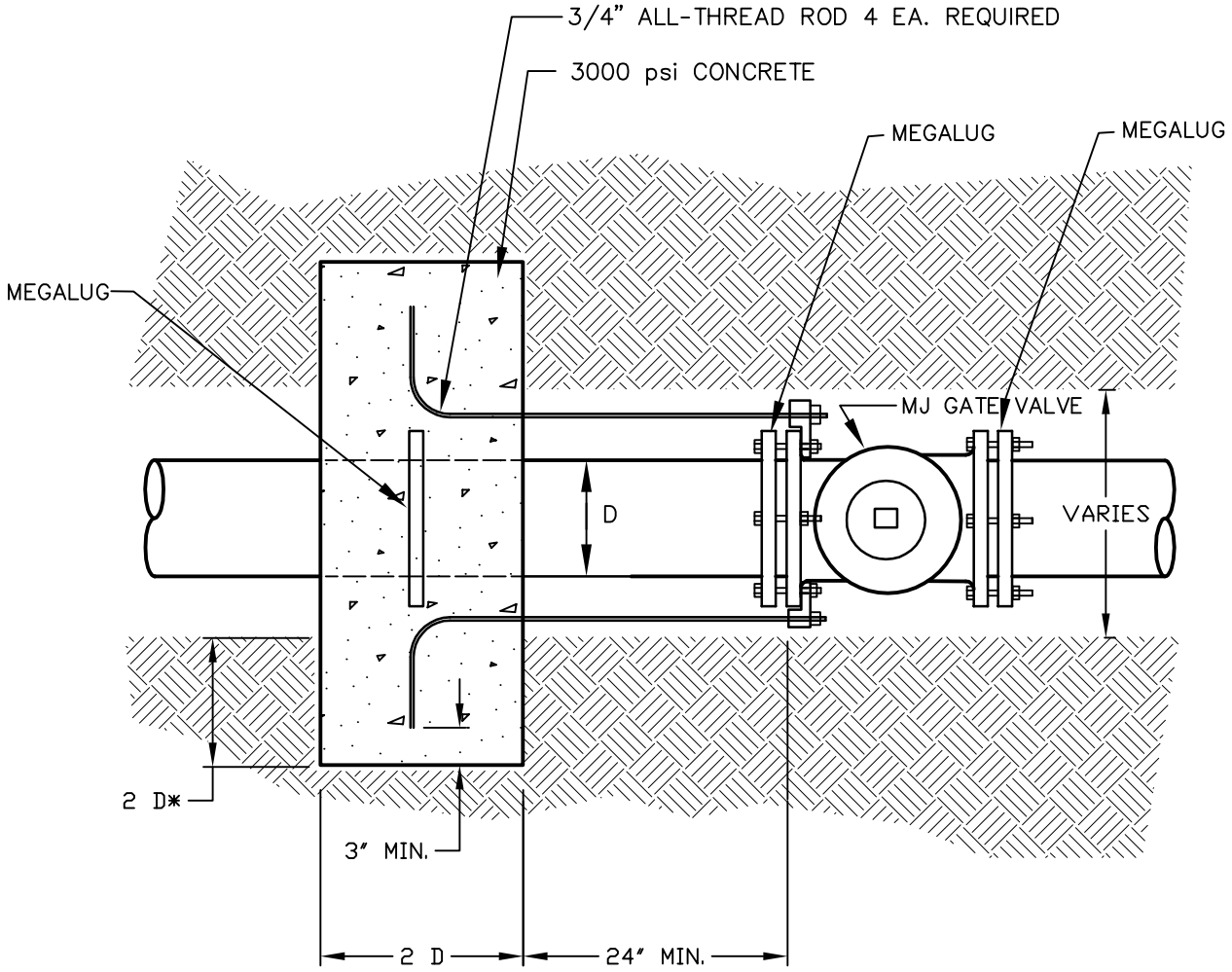

* DENOTES CONCRETE ANCHOR TO BE SET IN UNDISTURBED SOIL

TOWN OF BRASELTON WATER & SEWER DEPARTMENTS

JOB TITLE	SHEET TITLE	DRN. BY: EMI	REV. NO.	BY	DATE
STANDARD DETAIL	**CONCRETE RESTRAINT ANCHOR**	CKD BY:			
		APPD. BY:			
		DATE: SEP. 2004			
	DETAIL No. W-23	FILE No. 03033\W-23.dwg	SCALE: N.T.S.		